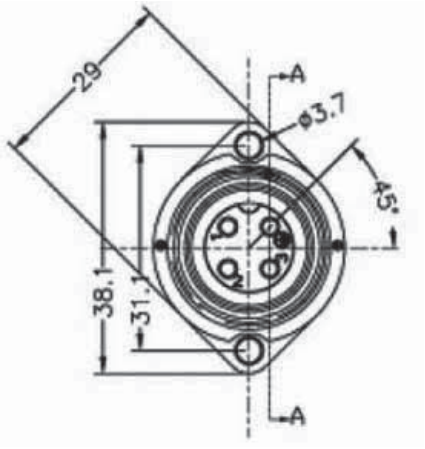

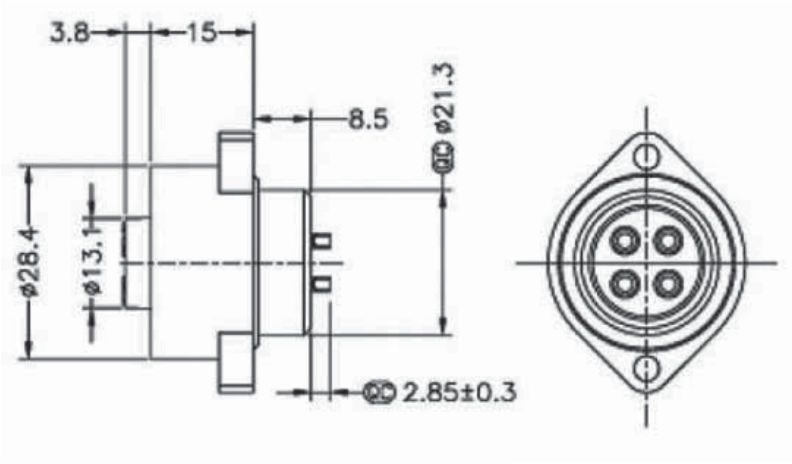

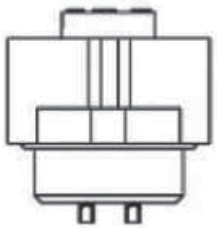

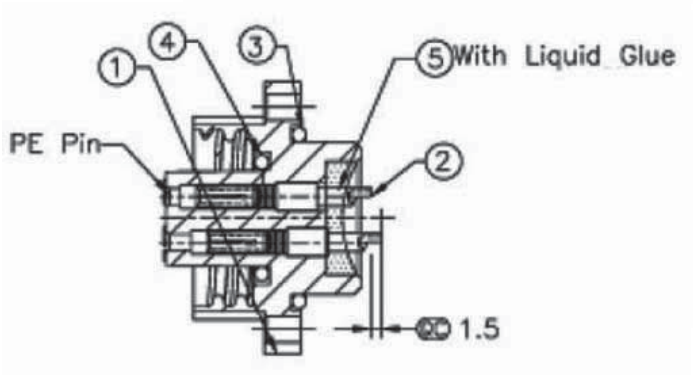

Material:
- Waterproof Rate: IP67
- Housing: Black ABS Plastic
- Connector: Black, Nylon+GF
- Pin: Copper Alloy, Gold Plated
- Contacts: Gold Plating
- Operating temperature: -40°C to +105°C

Electrical:
- Current Rating: 12A
- Contact Resistance: ≤ 20MΩ
- Insulation Resistance: ≥ 100MΩ @ 250V DC
- Durability: 1,000 Times
- Breakdown Voltage: ≥ 1,000V / 1 Minute

RoHS Complaint

Scale	1:1							Name
TOLERANCE						Drawn	12.01.11	Chappell
X.X	±0.40					Approved		
X.XX	±0.25							
X.XXX	±0.15							
Angle	±3°							
			Modification	Date	Name			

ASSMANN WSW components

Item No.
A-P04PFFS-SC-WP-R

Title
Waterproof Power Connector 4 Pin (12A), Female, Panel Mount

Drawing No.

rev00

Replace

Sheet